digital™

RA90 Level I Maintenance Course Reference Guide

Order Number EY-5804E-SG-0001

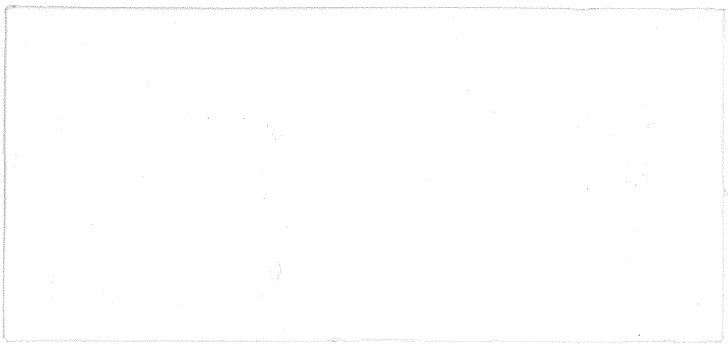

RA90 Level I Maintenance Course Reference Guide

Order Number EY-5804E-SG-0001

digital equipment corporation
maynard, massachusetts

First Edition, July 1988

The information in this document is subject to change without notice and should not be construed as a commitment by Digital Equipment Corporation. Digital Equipment Corporation assumes no responsibility for any errors that may appear in this document.

The software described in this document is furnished under a license and may be used or copied only in accordance with the terms of such license.

No responsibility is assumed for the use or reliability of software on equipment that is not supplied by Digital Equipment Corporation or its affiliated companies.

Copyright ©1988 by Digital Equipment Corporation

All Rights Reserved.
Printed in U.S.A.

The following are trademarks of Digital Equipment Corporation:

DEC	IAS	VAXcluster
DEC/CMS	MASSBUS	VAXsim-PLUS
DEC/MMS	MicroVAX	VMS
DECnet	PDP	VT
DECsystem-10	PDT	
DECSYSTEM-20	ReGIS	
DECUS	RSTS	
DECwriter	RSX	
EduSystem	VAX	

digital™

Contents

About This Course vii

1 Product Overview

Lesson 1 Main Features 1

2 Physical/Functional

Lesson 1 Field Replaceable Units 2
Major FRUs 3
Minor FRUs 3
Lesson 2 Operator Control Panel 3
Lesson 3 Error Log Silo 4

3 Theory of Operation

Lesson 1 Block Diagram 6
Lesson 2 Disk Topology 7

4 Installation

Lesson 1 Set-up 9
Environment 9
Operating Temperature and Humidity 9
Floor Loading 9
Thermal Stabilization 9
Lesson 2 Acceptance Testing and Unit Address 10

5 Fault Analysis

Lesson 1 Troubleshooting Flow 12

Lesson 2 Internal/External Diagnostics 13
VDS Diagnostics and Utilities for VAX Systems 14
HCS Controllers Diagnostic and Utility 14

Lesson 3 Fault Isolation 15
Thermal Overtemp Problems 15
Causes of Overheat Problems 16
Power Supply Problems 16
Interlock Problems 17
Error Code 3D HDA Read/Write Interlock 17
OCP/Bezel Interlock Problem 18
Operator Control Panel (OCP) Problems 19
Intermittent Drive and Controller Errors 20
Failure within Head Groupings 21
LBNs Correlated to Zone Write Boundaries 22
Failures Relating to Dedicated Servo 22
Care of an RA90 HDA FRU 23
Troubleshooting Error Codes 13, F8, E0 through EB 23
Media Removal Service for "Secure Sites" 24
Troubleshooting a Drive Hung in "WAIT" 24

Unit 5 Lesson 3 25
Exercises 25

Answers 26

6 Removal/Replacement/LARS

Removal/Replacement 27
LARS 27
Option Serial Number 27

7 Interactive Troubleshooting Simulator (ITS)

Figures

5-1 Block and Mechanical 17
5-2 RA90 Block and OCP Cable Connections 19
5-3 Ground Brush 20
5-4 Head Group Decoding 21
5-5 Write-Current Amplitude Zones 22

Tables

5-1 Differences in IC Numbers for Etch E and F 18

About This Course

This course provides information on the following:

- Removal and replacement of the FRUs in the RA90 disk drive
- SA600 Installation
- A functional block diagram of the drive
- Troubleshooting procedures.

This course also gives you practice using diagnostics, error logs, and the operator control panel in a fault isolation/fix environment using the interactive troubleshooting simulator (ITS).

Prerequisites

Before taking this course, you should have completed the DSA for Disks Level I course (EY-5593E-IV-001).

Goals

Upon successful completion of this course, you should be able to do the following:

- Set the unit address.
- Install the SA600.
- Understand the disk topology.
- Understand the troubleshooting flow.
- Perform internal and external diagnostics.
- Perform FRU removal and replacement.

Length

This course takes one day to complete.

Organization

This course has an introduction, seven units, and a final test. Each unit has a summary, which is in this guide. Each unit also has exercise questions, so you can review the material in each unit.

Description

Introduction—Previews the course content.

Unit 1: Product Overview—Provides an overview of the RA90's main features.

Unit 2: Physical/Functional—Describes the physical and functional location of each FRU. This unit also describes the operator control panel (OCP), and gives a detailed description of the error log silo.

Unit 3: Theory of Operation—Covers the physical block diagram and the RA90's disk topology.

Unit 4: Installation—Describes how to install the SA600; also describes how to set the unit address and run RA90 acceptance testing.

Unit 5: Fault Analysis—Covers the troubleshooting flowchart and internal and external diagnostics. This unit also covers the theory of in-operation, which is what happens if a problem occurs.

Unit 6: Removal/Replacement/LARS—Describes the removal and replacement of each of the RA90's FRUs. This unit also describes how to fill out the LARS report.

Unit 7: Interactive Troubleshooting Simulator—In a separate program, the simulator allows you to practice setting the unit address, run internal diagnostics, and troubleshoot the RA90.

Testing

There is an on-line, final test for you to take at the end of this course. To pass this course, you need a grade of 80% or better on this final test.

IVIS Menu Map

CM Course Menu

INT Course Introduction
100 Unit 1 Product Overview
200 Unit 2 Physical/Functional
300 Unit 3 Theory of Operation
400 Unit 4 Installation
500 Unit 5 Fault Analysis
600 Unit 6 Removal/Replacement/LARS
700 Unit 7 Interactive Troubleshooting Simulator
800 Course Test
Leave the Course

100 Unit 1 Menu (Product Overview)
110 Lesson 1 Main Features
120 Unit Exercises
Go to Course Menu

200 Unit 2 Menu (Physical/Functional)
210 Lesson 1 Field Replaceable Units
220 Lesson 2 Operator Control Panel
230 Lesson 3 Error Log Silo
240 Unit Exercises
Go to Course Menu

300 Unit 3 Menu (Theory of Operation)
310 Lesson 1 Block Diagram
320 Lesson 2 Disk Topology
330 Unit Exercises
Go to Course Menu

400 Unit 4 Menu (Installation)
410 Lesson 1 Set-Up
420 Lesson 2 Acceptance testing and Unit Address
430 Unit Exercises
Go to Course Menu

500 Unit 5 Menu (Fault Analysis)
510 Lesson 1 Troubleshooting Flow
520 Lesson 2 Internal/External Diagnostic
530 Lesson 3 Fault Isolation
540 Unit Exercises
Go to Course Menu

600 Unit 6 Menu (Removal/Replacement/LARS)
610 Lesson 1 Removal/Replacement/LARS
620 Unit Exercises

Go to Course Menu

700 Unit 7 Menu (Interactive Troubleshooting Simulator)
Go to Course Menu

800 Course Test

1
Product Overview

Lesson 1 Main Features

This unit provides an overview of the RA90's main features.

The RA90 is a random access, moving head, fixed-media disk drive using state of the art media, heads, and electronics technology. Unlike other disk drives, the RA90's seven disk platters rotate alongside one another, not one above the other.

The RA90 has six major and four minor FRUs. Removing and replacing four of the major FRUs hardly requires a tool. The drive weighs about 31.78 kg (70 lb).

The RA90 is dual-ported, and is an interface to a Digital subsystem through the SDI bus. The RA90 is supported by the following DSA controllers:

- UDA50
- KDA50
- KDB50
- HCS50
- HSC70.

The RA90 complies with the Digital Storage Architecture (DSA) standard. The RA90's media is formatted to the Digital Storage Disk Format (DSDF) standard. Both the DSDF standard and the DSA architectures are explained in the prerequisite course, DSA for Disks Level I.

Each drive can store just over 1.2 gigabytes of user data. The average seek time is about 18 to 18.5 milliseconds, with a burst transfer rate of about 22.2 megahertz.

The SA600 storage array is configured in a 60-inch-high cabinet. This cabinet configuration contains eight RA90s for a total of 9.6 gigabytes of storage capacity.

The RA90 requires no preventive maintenance or adjustments.

The mean time to repair the RA90 is 1.5 hours, which does not include the impact of VAXsim-PLUS or back-up restoration procedures, or travel time.

The drive is supported by VAXsim-PLUS and all DSA diagnostics. Using the RA90's internal diagnostics, you can isolate 95 percent of all hard failures down to a single FRU.

To further aid in fault isolation, the RA90 has a resident error log storage silo that holds up to 64 of the most recent drive-detected errors.

You can update the drive's functional microcode by plugging in an update microcode cartridge into the operator control panel (OCP).

2
Physical/Functional

Lesson 1 Field Replaceable Units

This lesson covers the physical location and function of each RA90 field replaceable unit.

The six major RA90 FRUs are as follows:

- Operator control panel (OCP)
- Blower motor in the blower/bezel assembly
- Electronic control module (ECM)
- Preamp control module (PCM)
- Head disk assembly (HDA)
- Power supply.

There are also four minor FRUs:

- Read/write cable
- Spindle ground brush
- Brake assembly
- SDI cables.

The operator control panel functions include:

- Run, write protect, and port selection
- Port selection display
- Fault indicator and error code display
- Unit address selection
- Test selection in the test mode
- Microcode update control.

Major FRUs

The blower moves air through the drive to cool the inside of the drive. The blower motor provides an electrical connection from the drive to the OCP. The blower motor **itself** is the FRU, **not** the entire blower/bezel assembly.

The ECM is one FRU made up of two modules: the servo module and the I/O read/write module. The ECM is attached to a carrier assembly.

The PCM is the interface between the I/O-read/write module and the preamp chips inside the HDA.

WARNING
The HDA is heavy. Use both hands when lifting it.

Minor FRUs

One of the brake assembly's functions is to bring the spindle to a halt if power is removed from the HDA. The brake assembly also prevents the media from turning when the HDA is being shipped.

The spindle ground brush functions as follows: as static electricity builds up within the rotating portions of the HDA, the spindle ground brush makes a path for the static to be shunted to ground.

Three important switch packs are mounted to the chassis: the RA90's hardware revision switches, which are in one switchpack on the side of the chassis. On the RA80-series drives, the hardware revision switches were located on the OCP.

The RA90's unique serial number is located in these two switchpacks, on the flex circuit assembly, at the rear of the chassis. On the RA80-series drives, the unique serial number was located on the OCP. This serial number is the actual drive serial number that corresponds to the RA90 unit serial number. Do not change or alter it in the field. This information is also displayed through the OCP.

The power supply is the only FRU located at the back of the RA90. The power supply is an H7142. There are no test points on the H7142 power supply.

Lesson 2 Operator Control Panel

This lesson covers the operator control panel (OCP).

The OCP's many functions include:

- Run, write protect, and port selection
- Port select display
- Fault indicator and error code display
- Unit address selection
- Test selection in the test mode
- Microcode update control

The OCP's four-digit alphanumeric display window shows the following:

- Unit address
- State of any enabled switches

- Write protection status of the drive.

The alphanumeric display window also shows the current internal test and the results of the test when the drive is running in test mode.

The OCP has six switches and seven LEDs. The seventh LED is the Ready LED. The LEDs show the actual "state" of the drive.

The switches are as follows:

- Run
- Fault
- Write Protect
- Port A
- Port B
- Test

Another important OCP function is control of the microcode update procedure.

The RA90 can update the complete drive's functional microcodes for both the master and the servo microprocessors. This is accomplished by using a cartridge. To update the microcode, insert the cartridge in the microcode update port, located on the OCP, and run test number 40.

A microcode update cartridge is available to the field. One cartridge can be used to update a number of disk drives.

See your RA90 service manual for step-by-step instructions on the microcode update process.

Lesson 3 Error Log Silo

This lesson covers the RA90's EEprom, located on the I/O read/write module.

The EEprom, or E-squared prom, performs four functions:

1. Maintains an up-to-date history of the drive
2. Stores the current drive status information
3. Stores the functional drive microcode for the master microprocessor
4. Maintains an error log in the EEprom error log silo.

The EEprom error log silo stores a log of up to 64 of the most recent drive-detected errors.

The displayed information is broken into two sections, header information and error information. The header information gives you the following:

- Drive type
- Maximum number of entries in the error log silo
- Number of seeks since last power-up
- Cumulative seeks since the drive was first powered up
- Cumulative length of time (in minutes) the drive has been on since it was first powered up. This number is displayed in both decimal and hexadecimal.

The error information shows the following:

- Entry location in the silo for each error log entry—one of 64 possible positions
- Entry count, showing how many times the entry has been rewritten
- Error type (a bit-to-text decode of the error type). The error type is the same LED error code used by previous drives. The information is displayed in hex, for easy lookup in the service documentation.
- Seek count, or the number of cumulative seeks at the time of the error
- Manufacturer's code. This code is important to the module repair centers.
- Drive-specific hex data. We read this data as bytes 9 down through 0.

  Bytes 9, 8, 7 and 6 make up a time stamp, the number of minutes on the drive clock at the time the error was detected.

  Bytes 5 and 4 are the destination cylinder address of the last SDI level II seek command.

  Byte 3 is broken down into lo and hi nibbles. The lo nibble indicates the selected head at the time of the error. The hi nibble is the error recovery level at the time the error occurred.

  Byte 2 was not being used when this course was written.

  Bytes 1 and 0 are the number of spin-ups since the drive was first powered up.
- Brief description of the error that occurred.

3
Theory of Operation

Lesson 1 Block Diagram

This lesson covers the key functions of the RA90's components and their interaction.

The I/O read/write and servo components work closely together, forming the electronic control module.

The I/O read/write module is the master microprocessor that communicates with the RA90's other two microprocessors, the OCP microprocessor and the servo microprocessor. The master microprocessor also controls SDI communications, and handles fault reporting and the error recovery mechanism.

The servo module microprocessor is involved in processing dedicated servo information for servo positioning, and monitoring the HDA's spindle speed, including spin-up and spin-down operations.

The operator control panel (OCP) is the user interface to the RA90. The OCP has its own microprocessor which communicates, through packet protocol, with the master microprocessor on the I/O read/write module.

The power supply provides plus and minus 5, 12, and 24 volts dc.

The preamp control module provides three main functions:

- Decoding the chip select signal to enable the proper read/write head
- Monitoring unsafe read/write conditions
- Passing read and write data to and from the electronic control module.

The HDA functions as the main storage and retrieval system for the RA90. The HDA contains the spindle motor and the recording media.

Lesson 2 Disk Topology

This lesson covers the RA90's media, beginning with a physical description, then a logical discussion, a description of how the heads stay on track, and finally how all of this information can help you fix an RA90.

Within the HDA are seven disk platters. Data is recorded on the top and bottom surfaces of six of the platters, and the top surface of the seventh. The bottom surface of the seventh disk is dedicated to track positioning or servo information.

Each surface is written to, or read by, a single thin-film head. Thin-film head technology is necessary because the data format is so densely packed: 2,661 tracks for each surface. Because there is only one head for each surface, the number of cylinders is also 2,661.

Logically, there are 13 data surfaces with 13 data heads numbered 0 through 12, and there is one servo surface, with one servo head.

Each track is divided into 70 sectors. Sectors 0 through 68 are identified by Logical Block Numbers (LBNs). Sector 69 is identified by a Replacement Block Number (RBN).

The data field contains up to 256 words. Each word is 16 bits long. The 18-bit format is not supported by the RA90.

Each data surface is divided into six major areas:

Disk Area	Cylinders
Host application	0 through 2,648
Replacement control table	2,649 and 2,650
Factory control table	2,651 through 2,653
Two diagnostic areas	2,654 and 2,655
Non-data tracks	2,656 through 2,658
Internal drive diagnostics	2,659 and 2,660

The drive's 14 heads stay on track with a combination of coarse and fine servo positioning. The servo head reads the servo data from the servo surface. The servo surface data is used to count the number of tracks during a seek, and keeps the heads on track center line during reading and writing.

Five preamp chips are necessary to amplify read signals from the heads, and to pass along write current to the heads.

Preamp chip	Head Number
Preamp 1	0 1 2 3
Preamp 2	4 5 6 7
Preamp 3	8 9 10 11
Preamp 4	12
Preamp 5	Servo head only

Finally, how can all this information be helpful?

When troubleshooting an RA90, remember that the head disk assembly (HDA) is the most expensive FRU in the drive. You should be reasonably sure that the problem is with the HDA before you replace it.

The error logs available to you may point to a particular block number where an error occurred. Doing some simple calculations, you can determine which logical cylinder, surface, and head was involved. After a few of these calculations, a pattern may be evident.

You can use the following formula if your block number is an LBN. (A list of the formulas for calculating from an RBN or a DBN is also available in Chapter 5 of your service manual.)

Divide the LBN by 897, disregard the fraction, and you get the logical cylinder.

Why should you divide the LBN by 897? Because 897 is the product of the number of data tracks for each logical cylinder multiplied by the number of data blocks for each track. In the case of the RA90, it is 13 heads multiplied by 69 LBNs for each track.

To calculate the head and surface, start with the LBN, subtract the product of the logical cylinder times 897, divide by 69, disregard the fraction, and you get both the head and the surface. Again, 897 is the product of the number of data tracks for each logical cylinder multiplied by the number of data blocks for each track. The "69" is the number of data blocks for each track.

In the case of the RA90, the head and surface are always the same number, because only one head for each surface exists. Refer to Chapter 5 in your service manual for more information on the formulas.

4
Installation

Lesson 1 Set-up

This lesson describes RA90 site and environmental considerations, and how to set up the SA600.

Before installating an RA90, consider the following.

Environment

The ambient air particle count for each cubic foot of air must **not** exceed 5 million particles larger than half a micron.

Operating Temperature and Humidity

Although the RA90 can operate well within a temperature range of 10° to 40° C (50° to 104° F), the customer can increase the drive's reliability and longevity by keeping the temperature between 18° and 24° C (64° and 75° F).

The relative humidity range should be 10 to 90 percent. Again, for increased reliability and longevity, Digital recommends a relative humidity of 40 to 60 percent.

Floor Loading

Consider how much weight your customer's floor can support. An SA600, fully populated with eight RA90s, weighs about 390.44 kg (860 lb). Add to that the weight of the shipping package and pallet, and the weight is 458.54 kg (1010 lb). An add-on drive with packaging and an uncushioned pallet weighs about 59.02 kg (130 lb).

Thermal Stabilization

Thermal stabilizing requires that the equipment be placed in its operating environment for at least 24 hours before its barrier-bag packaging is opened and the equipment is installed.

Because the drive's components are affected at different rates by changes in temperature, waiting 24 hours helps to prevent problems to the drive caused by temperature changes.

Now you are ready to install the SA600 and all its RA90s. When installing the SA600, make sure you follow the step-by-step instructions in your service manual.

- Inspect the outside of the shipping containers for damage.
- Use three people to de-skid the drive cabinet from the pallet.

- Check the outside of the cabinet for any damage.

WARNING
To prevent damage to users and equipment, the power sources must meet specifications required for this equipment.

Make sure all the drives and the power controller are set to operate at the proper voltage.

Make sure the ac circuit breakers are set to the **off** position on the power controller and on all of the drives.

Lesson 2 Acceptance Testing and Unit Address

This lesson covers acceptance testing and how to input the unit select address.

Follow the step-by-step procedures in your service manual for acceptance testing and setting the unit address. An installation is not complete until you test the RA90.

When you power up the RA90, it runs through a sequence of power-up resident diagnostics.

Run the **front panel lamp test.** Then run the **drive spun-down tests**. Run test 60 loop-on-test utility, then run test 00. An "S" is displayed at the start of the each test. A "C" is displayed at the successful conclusion of each test. Allow the drive spun-down tests to run for five minutes.

Now run the **drive spun-up tests.**. Spin the drive up and allow the ready LED to go on. Run test 60, then run test 00. Allow the tests to run for 30 minutes. While the drive spun-up tests are running, it would be a good time to hook up your SDI cables.

If an error occurs during any one of these tests, the test number is displayed where the error occurred. Press the **Fault** switch to display the error code.

Before enabling the ports, and bringing the drive on-line, you need to set the unit address. The unit address is programmable within a range from 0 to 4,094.

Set the unit address as follows:

1. Press the **Test** switch. The test LED lights and the default address is displayed.
2. Press the **A PORT** switch to select the digit position, from ones, tens, hundreds, to thousands. The selected position blinks.
3. Press the **B PORT** switch to increment the number from 0 to 9, displayed in the ones, tens, or hundreds position; and from zero to four, displayed in the thousands position.

After the unit address is set, press the **Test** switch to exit from the unit selection function.

NOTE
Attempting to program the unit address to a number larger than 4094 will reset the display to all 0's.

Before exiting, you are prompted to confirm that you want the unit number changed. The changed unit prompt is scrolled across the display.

The old unit address is overwritten with the new unit address, and the new unit address is displayed. The unit address number is written to the EEprom, so if the drive loses power the unit address is saved. The RA90's media is formatted at the factory, so formatting is not part of the installation process.

To verify communication with the drive and the controller, use the operating system. From an HSC, a five-minute test such as I-L-EXER will also verify communication without affecting system availability.

5
Fault Analysis

Lesson 1 Troubleshooting Flow

This lesson describes the RA90 troubleshooting flow.

To troubleshoot the RA90, diagnose the RA90 through an analysis of the error symptoms from both the drive and the subsystem. Isolate those symptoms to a single FRU without using standalone system diagnostics, or recreating the drive error symptoms.

The troubleshooting flow is made up of six steps you should follow each time you attempt to service the RA90.

1. Step 1—Use the service delivery tool VAXsim-PLUS.
2. Step 2—Examine and analyze the system error logs. Host error logs contain detailed information on intermittent and hard drive errors.
3. Step 3—Examine and analyze the drive's internal error logs. Real-time drive faults detected by the drive are logged in the EEprom's error log silo. As a last resort, if there are no detected symptoms in the drive's internal error logs or in any of the subsystem's error logs, then host diagnostics becomes the appropriate tool.
4. Step 4—Compare the failing symptom to the most probable failing FRU listed in your service manual.
5. Step 5—Replace the FRU. Replace the FRU only *after* you identify a prime suspect FRU from the previous steps.
6. Step 6—Verify that the repair was done successfully by using the drive's resident diagnostics. Verification by running host level diagnostics is unnecessary.

You must always do steps 1 through 6 when you service the RA90. These steps make up the RA90's actual "troubleshooting strategy."

NOTE
Since this course was produced, there have been some technical changes to the troubleshooting flowchart. Please turn to the "Troubleshooting" chapter in your service manual. You should become familiar with this section, and add notes and comments to the flowchart to help you service the RA90 in the future. Please take a few minutes to look over the troubleshooting flowchart in your service manual.

Lesson 2 Internal/External Diagnostics

This lesson covers the RA90's internal diagnostics that can be run through the operator control panel. This lesson also provides a brief overview of host-based diagnostics.

As you learned in the OCP lesson, there are nearly 50 different internal tests and utilities that can be invoked through the OCP.

The most common tests and utilities include the following:

- Test number 0-1—a test of the master ROM
- Test number 0-0—a chained sequence of tests
- Test number 40—a utility used to install new microcode
- Test number 41—a utility used to display the error log.

Your service manual provides a chapter on drive-resident diagnostics and utilities. This chapter contains a general description of what each diagnostic tests, as well as any special instructions, or unique OCP displays, associated with the diagnostic or utility.

As a test runs, an "S" followed by the test number is displayed. This means the test has started. Then a "C" followed by the test number is displayed. This means the test is complete. When the test has completed successfully, a "T" followed by the test number is displayed. Selecting a chain test displays a sequence of S's and C's, signifying the actual tests being run.

If a fault occurs, the fault LED goes on. The test number at the time of the error is displayed. Press the **Fault** switch. The error code is displayed. Press the **Fault** switch again, and the error is cleared.

NOTE
Although the power-up and idle-loop diagnostics are not invoked through the OCP, the fault LED may go on if these diagnostics detect an error, and an error code may also be displayed by pressing the Fault switch.

When you are finished running tests, press the **Test** switch to exit the test mode.

Some of the diagnostics implement a scrolling display pattern. To stop a scrolling display pattern, press the **Run** switch.

If you attempt to invoke certain diagnostics while the drive is in a faulted state and unable to run, the diagnostic displays "N RUN." If you attempt to run a test that requires the disk to be spun up, while the drive is spun down, this causes the fault LED to go on. Pressing the **Fault** switch displays the error code "E C-A."

Trying to run tests requiring the drive to be spun down, while the drive is spun up, also causes the fault LED to go on. Pressing the **Fault** switch displays the error code "E 7-B."

For more detailed information on internal diagnostics, refer to the drive-resident diagnostics and utilities, and the troubleshooting and error codes chapters in your service manual.

There are times when it is necessary to run system-level diagnostics or utilities.

VDS Diagnostics and Utilities for VAX Systems

EVRLJ is a subsystem exerciser, used to verify that the subsystem is functioning properly. EVRLJ performs extensive input and output operations, to stress the I/O circuits.

EVRLJ has four subtests:

- Subtest 1 is a controller verification test.
- Subtest 2 is a subsystem verification test.
- Subtest 3 is a subsystem exerciser.
- Subtest 4 is a modifiable subsystem exerciser.

EVRLK is the bad block replacement utility, commonly referred to as BBR. BBR performs bad block replacement by scanning and testing each block of the media. BBR can also be used to manually replace individual blocks.

EVRLL is the disk error log utility that displays the status of all four ports of the selected controller. Use this utility to display or print out the system error log.

EVRLB is the disk formatter utility. Before you invoke this utility, make sure the customer has backed up their applications and information. EVRLB destroys data as it reformats the host application area and the replacement control table.

EVRAE is an on-line system exerciser. It duplicates stressful operating system conditions by issuing a heavy load of I/O requests. EVRAE is divided into two tests:

- Test 1—for manual intervention
- Test 2—for issuing a steady stream of I/O requests.

EVRLF is a basic subsystem diagnostic commonly referred to as "Tests 1 through 3." These tests are used to report hardware failures in the controller and bus, as well as to verify read/write ability using host ring buffers.

EVRLG is a disk exerciser commonly called "Test 4." This test exercises the disk by selecting a cylinder to seek to, and performs reads and/or writes.

All of these diagnostics are available on a MicroVAX system as a part of the MDM diagnostic package.

HCS Controllers Diagnostic and Utility

ILDISK is an in-line disk diagnostic that can isolate drive-related problems to one of three possible areas.

ILEXER is a in-line multidrive exerciser designed to exercise the various disk drives attached to the HSCs. The error reports given by I-ELEXER do not provide any analysis of the errors. ILEXER is strictly an exerciser.

DKUTIL is a utility used to dump error logs. The user is promted for the unit number of the drive.

VERIFY is designed to check the integrety of the disk.

FORMAT is an off-line utility used to format disks. It formats with either 512- or 576-byte sector size. FORMAT can also be used to format only the DBN, or to format both the LBN area and the DBN area.

Lesson 3 Fault Isolation

This lesson uses a "WHAT HAPPENS IF" description based on failure modes that could occur. You will read about a few failure modes that are not directly interpretable by error event codes.

Thermal Overtemp Problems

The RA90 has three overtemp sensors. The first is located in the power supply, and is provided to keep the power supply at a safe operating temperature.

If the RA90's power supply overtemp sensor "sets," the power supply drops all outputs to the RA90 immediately immediately (removing the blower fan voltage as well) and continues to keep power to the temperature monitoring circuitry in the power supply. If the power supply sensor "resets" because of convection cooling to a safe operating range, the power supply will restore power to the logic in the drive. The sequence is as follows:

1. The power supply detects its overtemp condition and asserts the OVERTEMP signal to the master processor.
2. The drive master processor "housekeeps" any active I/O (finish write of current sector).
3. The master processor updates the drive internal error log header information and indicates in the information why it is going down.
4. The master processor waits for the power to go away.
5. The power supply drops power after a specified time (in milliseconds).
6. When power is restored to the drive, the power supply asserts power OK and DC OK indications.
7. The master processor, in its initialization process, determines that it is restarting after the occurrence of a power supply overtemp condition. The master processor writes the error (LED) code 2D into the drive internal error log at the appropriate error descriptor entry. The drive then returns to the "state" that it was in before the power loss.

When the power supply drops all the voltage outputs, it also causes the drive blower assembly to stop. The drive power supply must then convectionally cool. Typically, it may take several minutes to cool down. When the power supply temp sense circuitry "resets", the power supply then reapplies power to the drive, asserting the DC OK signals in a normal way.

Remember, when the error event code 2D occurs, the drive power supply turned off all dc voltages because the heat sensor detected an overheat condition in the power supply logic. Do not interpret this as an ac power failure or ac input power levels.

The second and third sensors are located on the drive ECM servo heat sinks. These sensors are provided to be sure the RA90 is properly cooled and that the thermal temperature of the servo power transistors is not exceeded. Should one of these sensors "set," the RA90 does the following:

- Unloads the heads.
- Locks the positioner.
- Spins down the drive.
- Retains power, and the blower motor continues to cool the assembly.

- Logs error codes 27 and 28.
- Logs a drive-detected error to the controller.

Error (LED) code 27 or 28 indicates that either the "S1" or "S2" heat sink thermal sensor on the respective ECM servo heat sink has reached its overtemp set point. The RA90 then writes the error log entry into the drive internal error log. The RA90, if "available" or "on-line" to a controller, raises attention to the subsystem. The RA90 then unloads the heads and locks them, and spins down the HDA.

If the RA90 was on-line at the time of the overtemp problem, the system puts the drive in a mount verify condition and VMS issue an on-line command to the controller. The controller then issues a run command to the drive to bring the drive on-line. If the drive cannot be spun up because of the heat sink overtemp condition still present, the drive remains in the mount verify state until the condition is corrected or VMS "times out" the mount verify.

NOTE
Etch revision E of the servo boards will not have the sensors to enable LED 27,28 errors. Etch revision F boards will contain the logic to support these LED codes. Approximately the first 3,000 revenue units will not have the logic to support these error codes.

The RA90 contains a fourth thermal sensor. This "active" thermal sensor is used by the drive servo microprocessor to monitor changes in the ambient air temperature. Mounted on the front end of the ECM servo electronics, the thermal sensor is "read" through an ADC (analog-to-digital converter) by the servo processor, and the sensor allows the servo processor to provide precise control over wide temperature ranges of the servo subsystem.

Causes of Overheat Problems

- The blower motor is not working. It is possible to have a blower motor that at times quits spinning on its own.
- The ambient air temperature is too high. This should be an obvious condition, as other RA90 drives may have detected this condition. The temperature sensors used in the product have their set points at a position so that the drive is expected to run over the full "Class B" temperature range of 10° to 40° C (50° F to 104° F).
- The front access cover filter is dirty.
- The ECM module failed.
- The power supply is bad.

Power Supply Problems

Obvious indications, such as the OCP displaying no lit LEDs or alphanumeric information, may mean that the power supply is defective.

Isolate a defective power supply as follows.

1. Push the **Fault** switch. If the power supply is working, then all the alphanumeric display segments should momentarily go on. If the segments do not go on, make sure the OCP is seated properly. If there is no power to the OCP panel, do the following:
   a. Remove the rear cabinet access cover.
   b. Locate the failing drive power supply.

c. Check by smell and touch that the temperature on the side of supply does not indicate that the supply may be "off" because of an "over temperature" condition.

d. Check that the power supply voltage selector slide switch is in the proper operating range (110/60 Hz or 220/50 Hz).

e. Make sure the ac circuit breaker is on.

f. Make sure the drive power cord is plugged into the power controller and the drive.

2. Make sure the ECM module is seated correctly. On the back top of the servo half of the ECM FRU, check the J-106 plug for damage. Also check the P-106 plug of the power supply.

   A key signal to the power supply is a signal called "ON L." The ON L signal is derived on the ECM, which in turn is determined that the interlock from the OCP through the blower bezel assembly to ECM to the supply is broken.

   NOTE
   To troubleshoot an interlock problem, see the "Interlock Problem Example" section that follows.

3. If the green LED is still not on, replace the power supply.

4. If the power supply LED is on, but no display is on the OCP, remove the power supply and remove the "top" cover of the supply (three 1/4-inch hex nuts), exposing the back of the power supply power connector. With small probes on a DVM, you can measure the voltages on the connector when the power supply is reinserted into the drive. (The power supply must be on the drive before power up). In the service manual, following the error code "13", there is a table listing power supply connector pins, wire color, and voltages.

Interlock Problems

Error Code 3D HDA Read/Write Interlock

This problem often appears as a secondary problem after a HDA or an ECM has been changed. The 40-pin flat shielded cable between the ECM module P-105 and the PCM module P-2 is inoperative. If this interlock is "broken," power is still supplied to the drive (Figure 5-1).

Figure 5-1 Block and Mechanical

- Disconnected cable.
- Poor connections.
- Bad connectors.
- Broken wires in shielded cable.

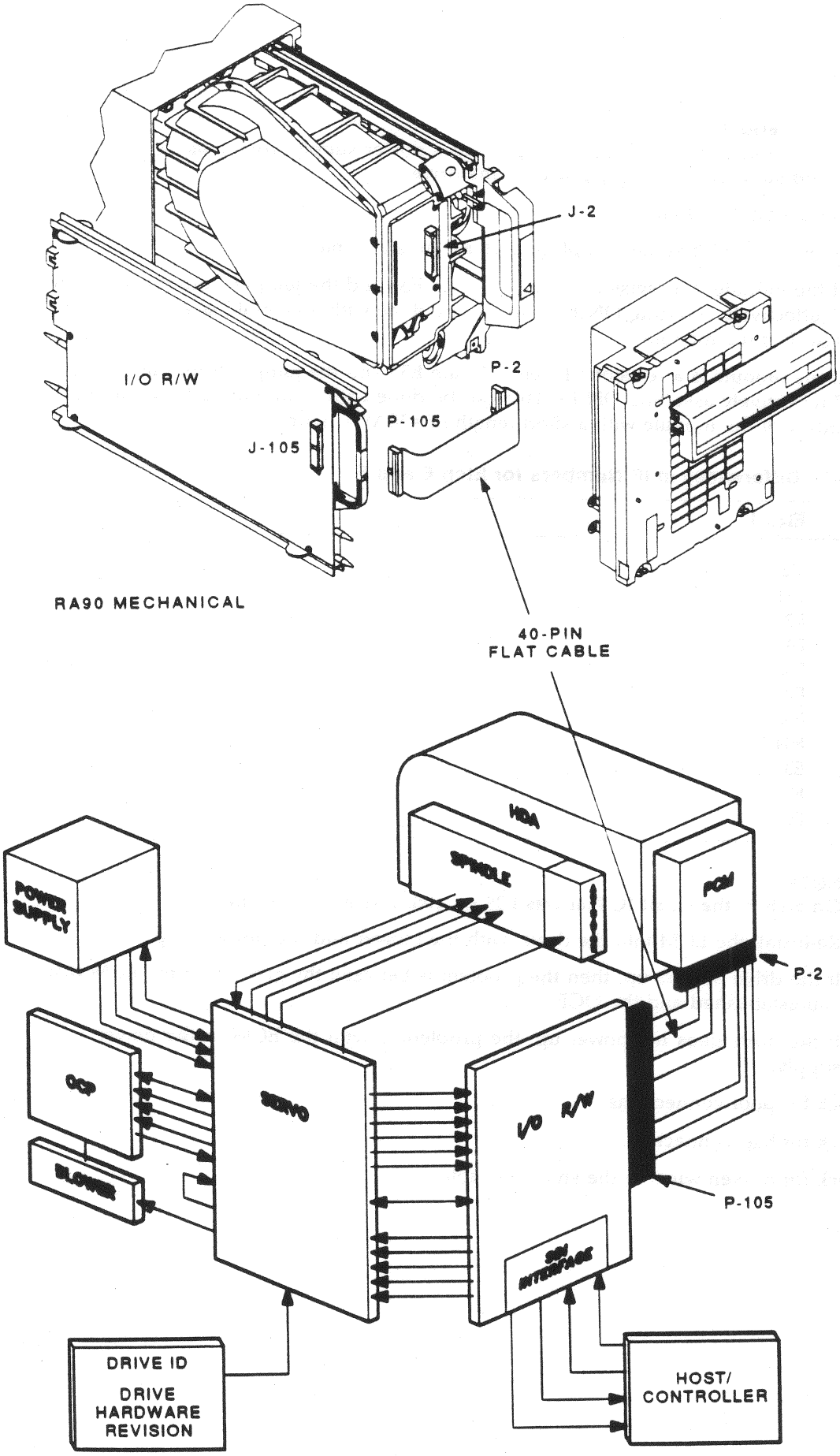

MA-X0738-88

Fig 1. RA90 BLOCK DIAGRAM AND MECHANICAL

OCP/Bezel Interlock Problem

An OCP/bezel interlock problem would prevent a power supply from sensing ON L asserted, and so would not apply power to the drive.

Isolate this problem as follows:

1. Remove the ECM module and place it on an antistatic mat.
   a. If the module is a revision "E" etch, locate E36 and the jumper from pin 11 to pin 7 (effectively asserting ON L). This can be done with a careful "tack" solder on side 1 of the module.
   b. If the module is a revision "F" etch, locate E35 and the jumper from pin 11 to pin 7 (effectively asserting ON L). This can be done with a careful "tack" solder on side 1 of the module with a short length of #30AWG wire.

Table 5–1 Differences in IC Numbers for Etch E and F

Etch E	Etch F
G2	G2
E42	E41
E31	E31
E47	E46
E33	E32
E32	E29
E34	E33
E35	E34
E36	E35
E25	E24
E24	E25

NOTE
On etch F, the small IC that was E29 on etch E is no longer there.

   c. Re-install the ECM into the drive, with the blower and the power supply.
   d. If the drive powers up, then the problem is between the ground on the ECM that you established and the OCP.
   e. If the drive does not power up, the problem is with the ECM or the power supply.
2. Check for poor connections.
3. Check for bad connectors.
4. Check for broken wires in the shielded cable.

Operator Control Panel (OCP) Problems

The OCP communicates through the blower/bezel assembly to the servo module, and finally to the master processor on the I/O module. This two-way serial communication protocol is being continuously verified by the master processor on the ECM and by the OCP slave processor.

The reported call is "the DUA4 operators control panel (OCP) input switches and indicators are not working." There are no indications.

The OCP panel contains a micro slave processor with these functions:

- Select and display the unit address.
- Select run, write protect and ports A, B, or test.
- Display fault indications and error codes.
- Select test in the test mode.
- Control the drive microcode update process.
- Communicate with the master processor located in the I/O read/write module.

The OCP is the main troubleshooting tool for the RA90 disk. Isolate a defective OCP as follows (Figure 5-2).

Figure 5-2 RA90 Block and OCP Cable Connections

1. If the OCP is displaying a constant error code (for example, B9, B8, or B4) this indicates that the OCP is having a problem communicating "serially" with the ECM. There may be a serial data line problem instead of a power problem to the OCP. Note that if the OCP is displaying an error code such as B4, the master processor will log into the drive internal error log silo a corresponding "B6" error code as the drive's interpretation of the problem.
2. Remove the OCP.
3. Try installing the OCP in the bottom connector in the blower motor assembly.
4. Verify light test. If this works, find out why the top connector is not working. If this has no effect, continue with these steps.
5. Be sure there are no bent pins in the **blower** motor assembly and OCP panel.
6. Remove the blower assembly.
7. Be sure there is a good plug connection and no damaged pins between the blower motor assembly and the ECM.
8. Be sure the OCP appears to have power (some LEDs/displays at normal brilliance).
9. Replace the OCP.
10. Replace the ECM.

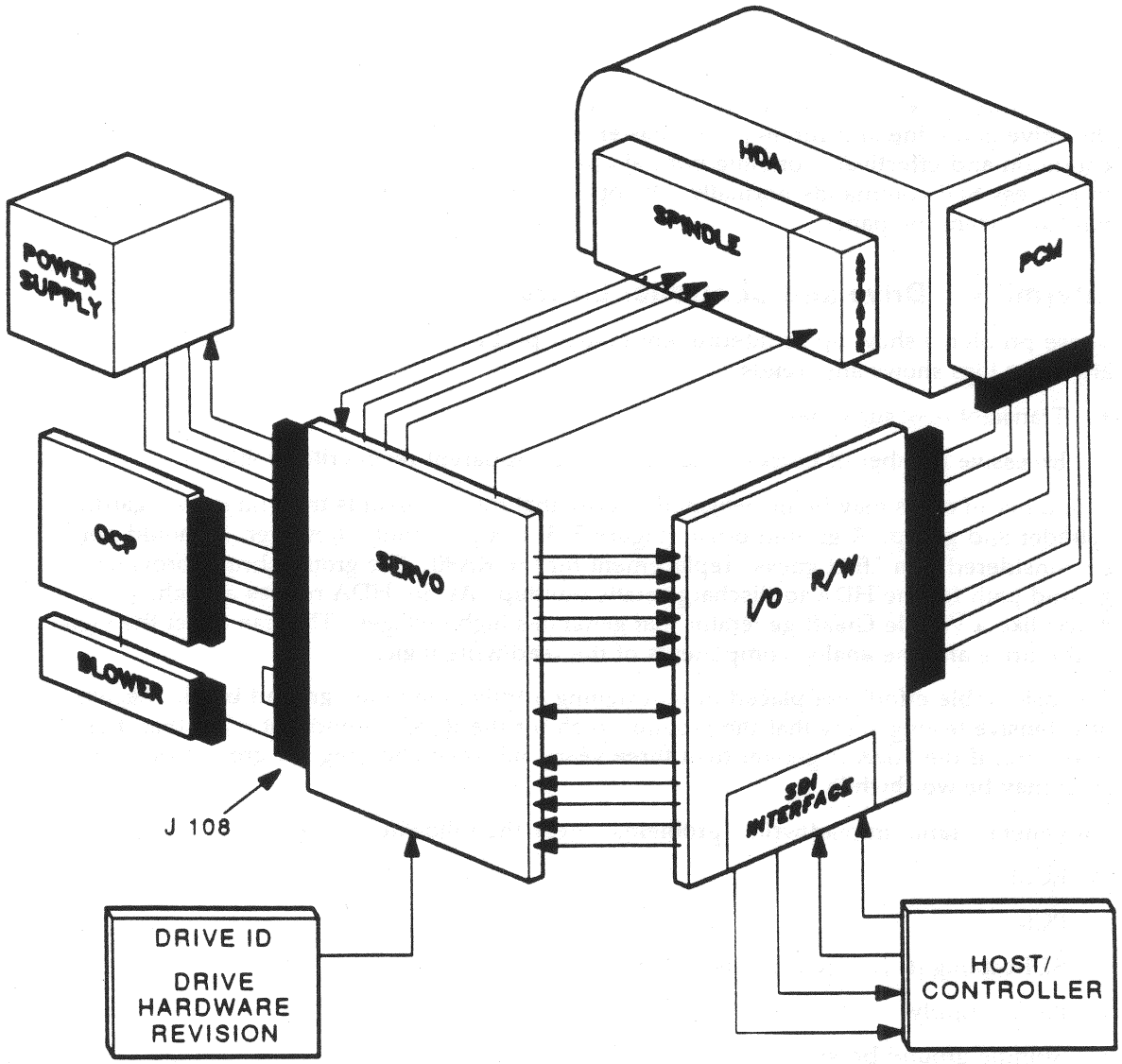

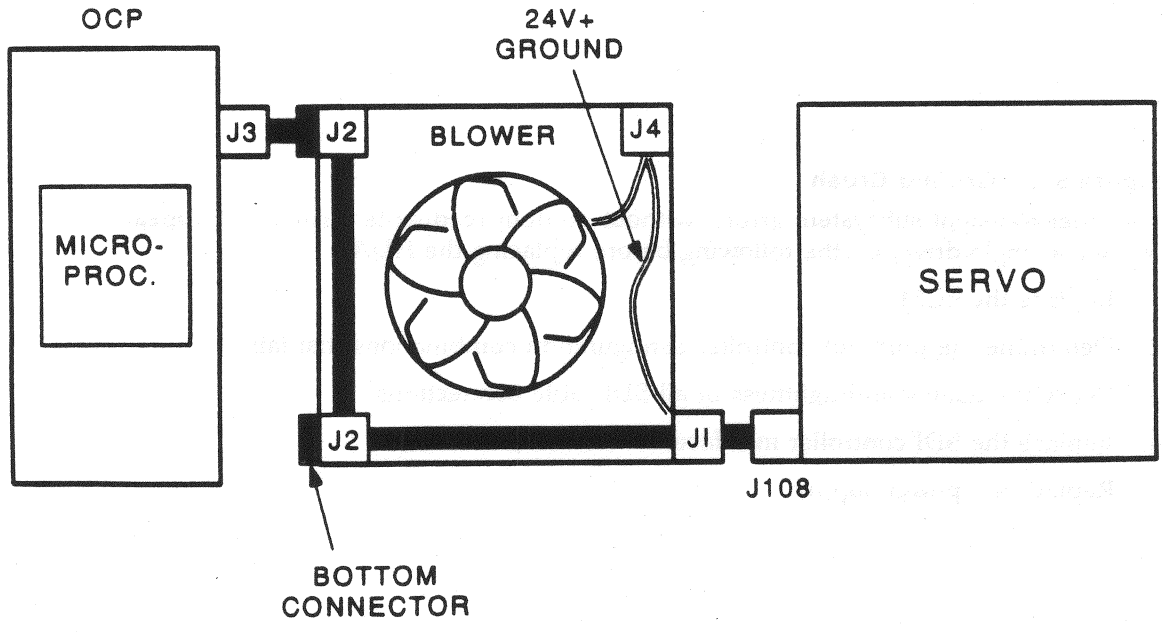

MA-X0735-88

Fig 2. RA90 BLOCK DIAGRAM, OCP, CABLE CONNECTIONS

One maintenance feature of the RA90 is, if the OCP serial communications link fails while the drive is on-line and running, the master processor can put the OCP into a "slave" condition and effectively continue normal operations with the host. The drive continues to process SDI commands normally. An operator would **not** be able to do any OCP functions from the panel.

Intermittent Drive and Controller Errors

These problems show up as intermittent system problems. No pattern of analysis from any error logs shows any trends.

- Transient disk subsystem errors.
- Excessive number of blocks replaced because apparent read/write problems.

A number of areas may be investigated. Verify that the problem is truly random regarding cylinder and group. A ground brush (Figure 5-3) is a possibility; however, it should not be considered as a "first guess" replacement for the RA90. The ground brush provides a ground path for the HDA to discharge static buildup. As the HDA rotates at high speed, it acts like a Van de Graaff generator that generates high voltages. This can affect the logic in the drive and the analog components of the read/write logic.

A considerable effort was placed in redesigning a truly "long life" ground brush. Results of extensive testing show that the ground brush for the RA90 should last more than five years. So, if the HDA is greater than three years old, then checking the ground brush for wear may be worthwhile.

For general "random read/write" problems, check the following in order.

1. ECM
2. PCM
3. SDI cabling (if you detect pulse errors)
4. Power supply
5. Spindle ground brush
6. HDA

Figure 5-3 Ground Brush

For other transient subsystem errors (without random read/write errors) that appear to involve a single drive, do the following before replacing the HDA:

1. Replace the ECM.
2. Determine the port and controller configuration combinations that fail.
3. Verify the quality and tightness of all SDI cable connections.
4. Replace the SDI controller interface.
5. Replace the power supply.

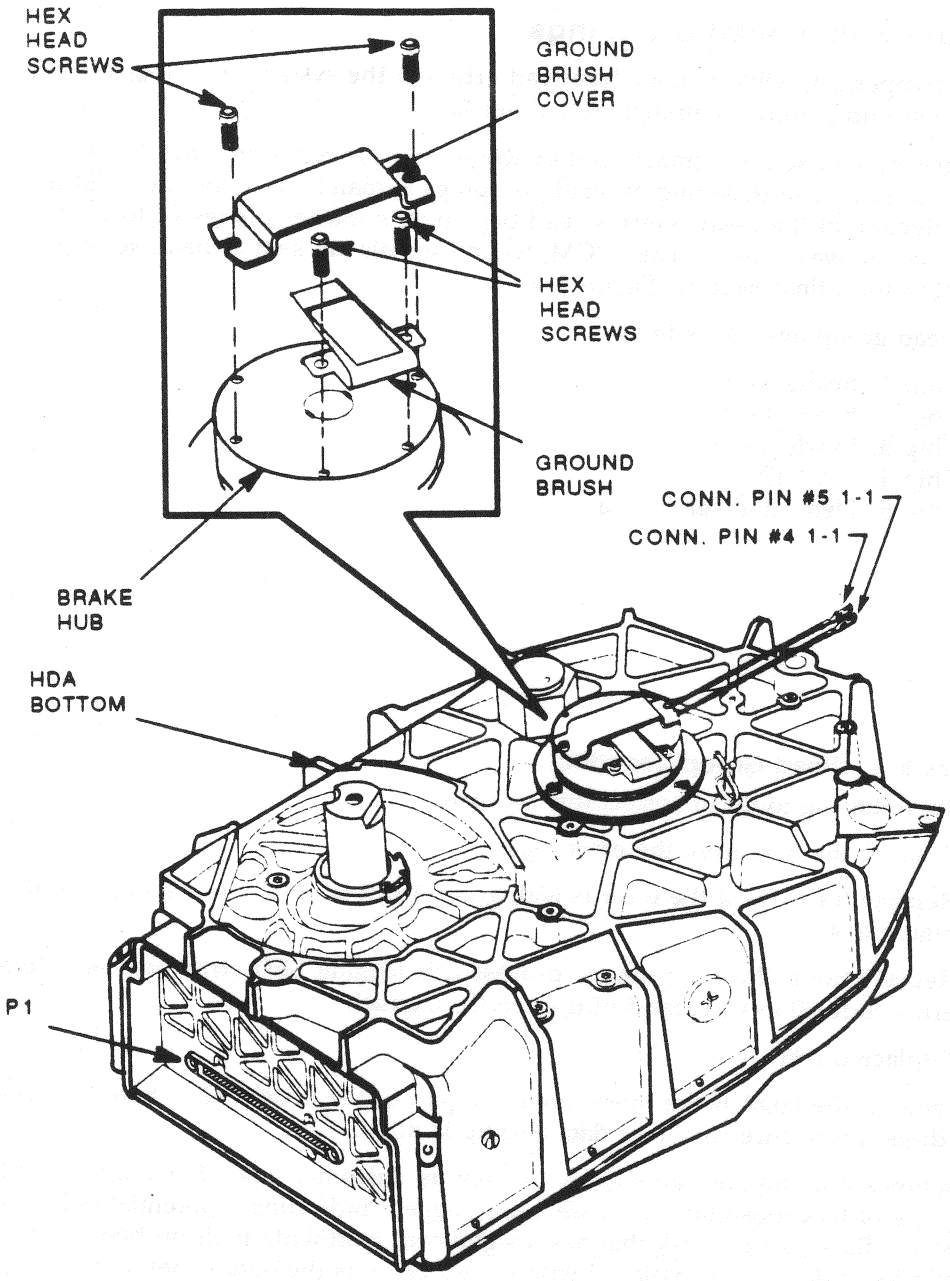

Fig 3. GROUND BRUSH LOCATION

6. Be sure the ground brush is not worn out.
7. Be sure the ground brush is not mechanically damaged.

Failure within Head Groupings

What happens if, when you analyze read errors in the system error logs or HSC console logs, you find pattern groupings of bad heads?

The group/head select is transferred by the master processor to a head select latch on the PCM module. The decoding of head groupings is mainly done by the PCM module. A basic decode of the head select is read back by the master processor to verify that the head decode was correct. Then PCM decode signals are sent to head select chips inside the HDA for a final decode (Figure 5-4).

The head groupings are as follows:

Chip 1: heads 0—3
Chip 2: heads 4—7
Chip 3: heads 8—11
Chip 4: head 12
Chip 5: Dedicated servo data

Figure 5-4 Head Group Decoding

Do the following to try to correct this problem.

1. Analyze the data from the error logs.
2. Replace the PCM if the error is with group/head 12 only, or in groups as identified in Figure 5-4.
3. Replace the PCM if the master processor is logging LED error code 60. Reference error code 60 in Chapter 5 of the service manual.
4. Replace the HDA.

Remember, the HDA is the most expensive part of the RA90. Also, before working on the bad drive, make sure customer data backup is done.

Sometimes it is not advisable to try to back up customer data. For example, if large numbers of ECC/position errors are being logged, indicating a potential read/write path problem. Backing up a disk that has a significant read/write path problem could result in the blocks of data being replaced with forced error as the data is being backed up. This could be the case if the ECM read circuitry or PCM were failing for all heads. If the PCM and the ECM have been replaced, then make sure customer data has been backed up before replacing the HDA.

A disk that is showing evidence that blocks are being replaced with forced error should **not,** in most cases, be backed up until the problem is resolved by an ECM or PCM replacement. Backing up the disk or other user continued use of the disk before repair results in continued "compromise" of the customer data.

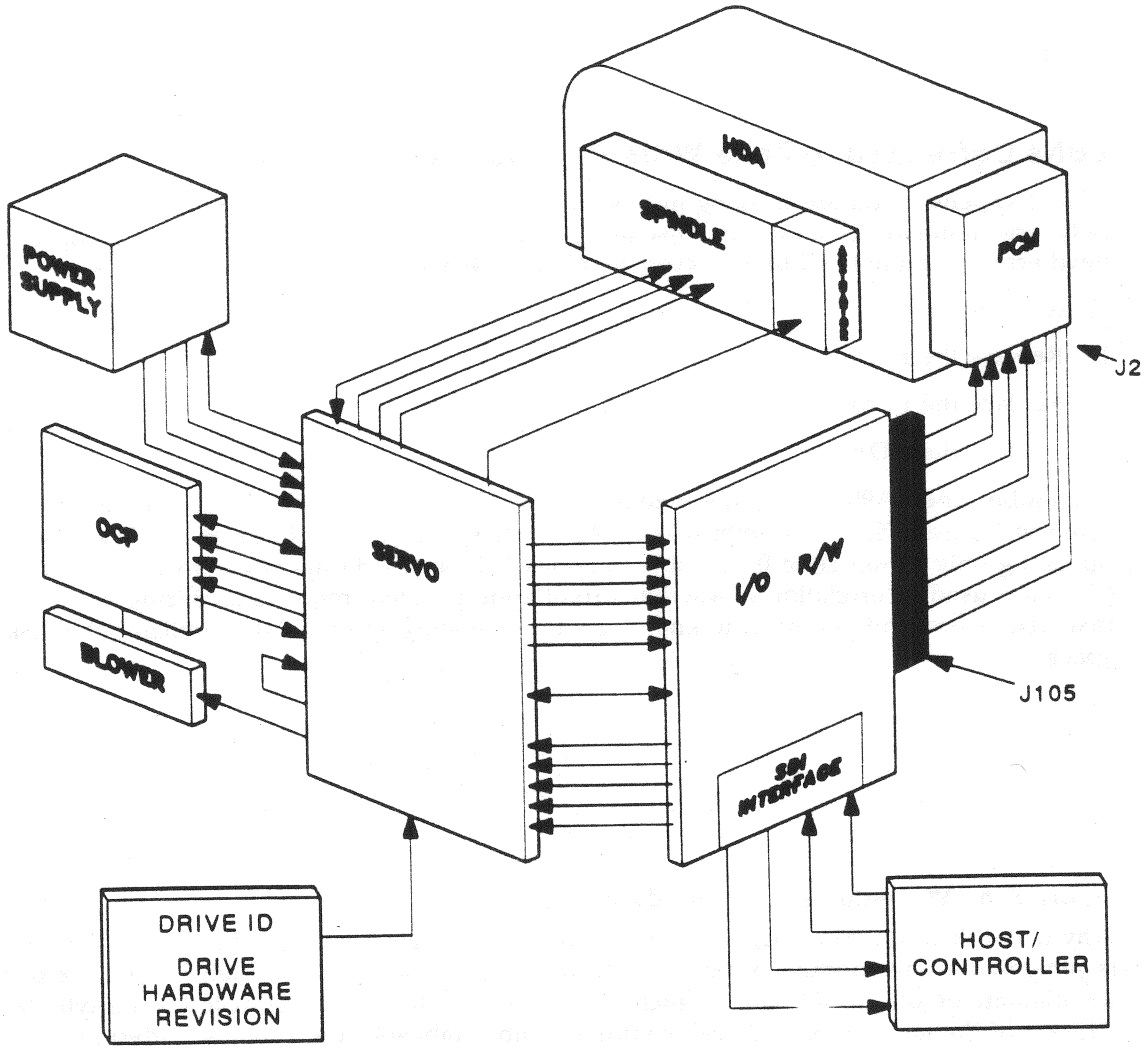

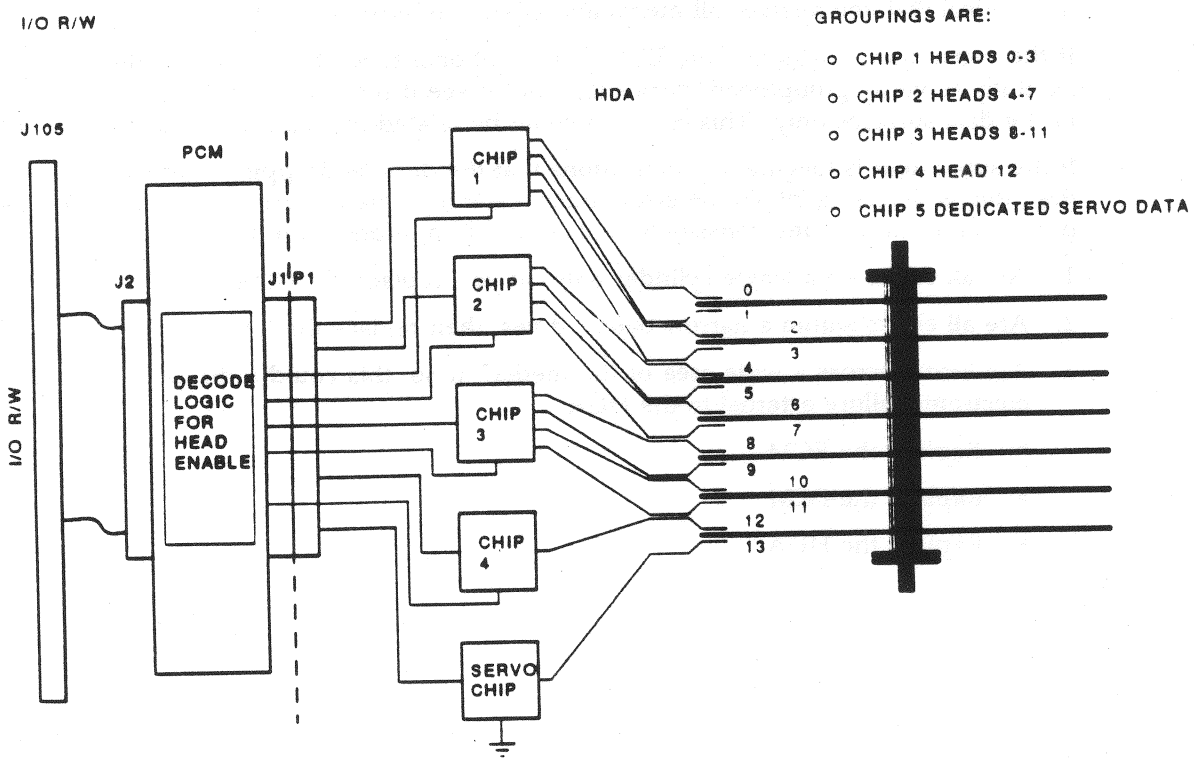

MA-X0734-88

Fig 4. HEAD GROUP DECODE

LBNs Correlated to Zone Write Boundaries

What happens if you are working in host error logs, and there seems to be errors with only large-number LBNs? From close analysis you find no consistency at all in group or head errors. You notice LBNs in error numbers 1546428 or larger in the error logs.

Do the following:

1. Replace the PCM.
2. Replace the ECM.
3. Replace the HDA.

Remember, the RA90 divides the media into four different write-current amplitude zones, listed in Figure 5-5. A customer using 25% of the space on a RA90 drive will likely be operating only within zone 0. Trouble in zones 1, 2, and 3 do not show up until those LBNs are used. Correlation of a write-current zone problem requires analyzing more than 100 errors, and you need to know how the operating system disk is utilizing the disk space.

Figure 5-5 Write-Current Amplitude Zones

Why is the PCM the first suspect for this failure? The logic decode and amplifier current is generated in this module. Why is the ECM a suspect for a zone problem? The zone bits do originate on the ECM board in microcode as the master processor decodes the cylinder address of the last SDI level 2 seek command and establishes the zone bit pattern.

Failures Relating to Dedicated Servo

Because the RA90 runs from a dedicated servo system for coarse and fine track alignment, it is critical that you analyze all media and positioner errors with this in mind.

If the subsystem is logging **only** ECC- and positioner-type errors, analyze the data carefully to verify group/head correlation and to see if the errors are in specific areas of the data surfaces only. This situation could be related to a bad media area of the disk.

If the subsystem is logging any indications that the drive is dropping read/write ready or the drive is detecting 39, 45, 66 error codes, carefully note the drive's internal error log to determine if there is any consistent "radial" position information there.

1. Are all errors on a single cylinder only? If yes, replace the HDA.
2. Are all errors within a narrow band? If yes, then replace the HDA.
3. Are errors across a wide area of the media? If so, this could indicate a possible electronic failure external to the HDA.
   - Replace the ECM.
   - Replace the PCM.
   - Replace the HDA.

CYLINDER RANGE	ZONE	LBN
0000-1723	0	0-1546428
1724-2021	1	1546249-1813724
2022-2336	2	1813725-2096289
2337-2650	3	2096290-2377747

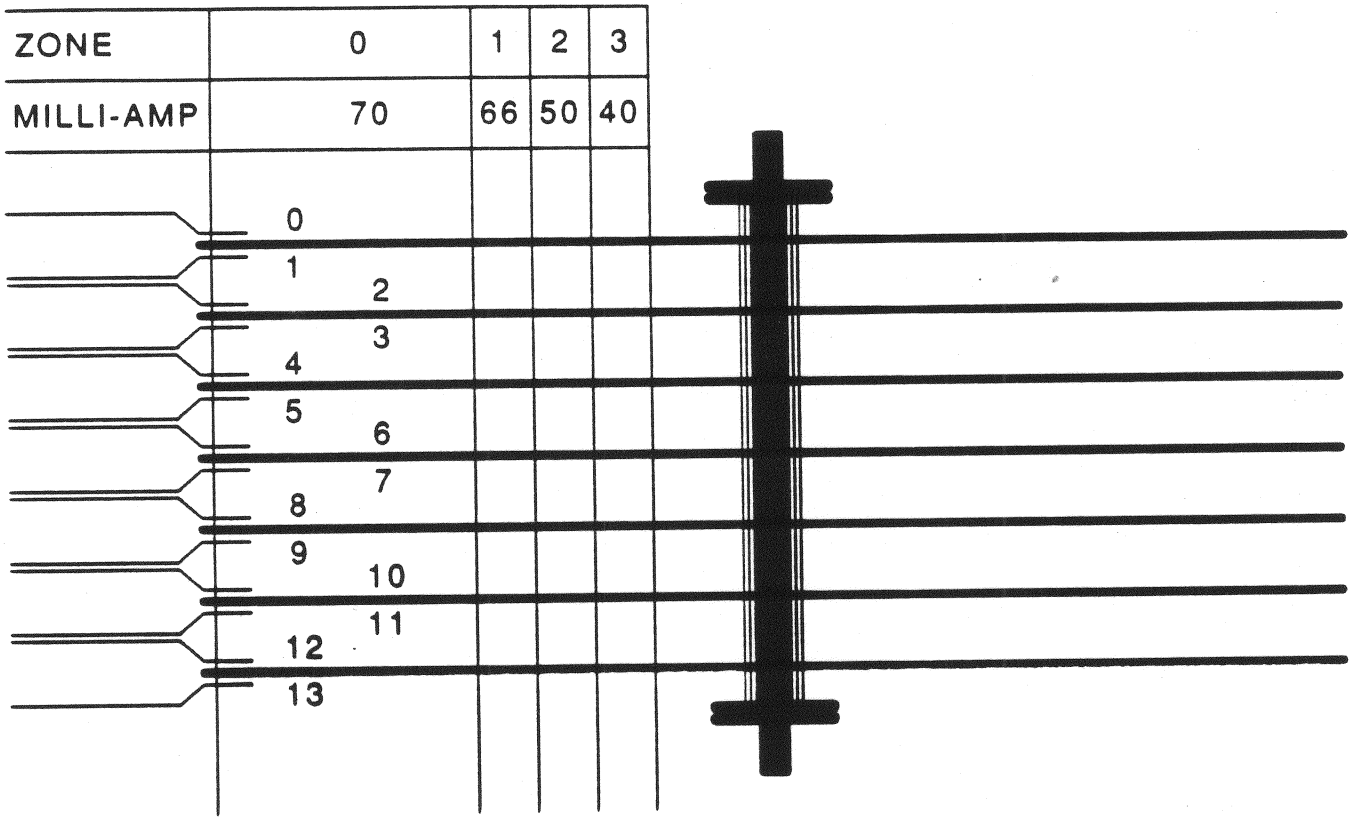

MA-X0737-88

Fig 5. WRITE ZONE BOUNDARIES

Care of an RA90 HDA FRU

The RA90 HDA is a delicate, precision-made electromechanical device. For the RA90, Digital has taken significant steps to ensure that the HDA is delivered to the field.

These steps include the packaging of the HDA in a heat-sealed barrier bag, with desiccant inside the bag.

NOTE
Do not open the bag until the HDA is ready to be used. Should an HDA be removed from the barrier bag for use in a drive and not be left in the drive, the HDA should be returned to the barrier bag in the original packaging, with the desiccant, and the bag must be closed and sealed with tape. Use "duct" or similar tape to seal the bag.

The branch support kit should contain a roll of "duct" tape. Any HDA that is not in a drive should be kept in the original HDA FRU packaging, sealed shut with the desiccant inside. This includes defective HDA FRU assemblies being returned through the logistic system.

The "red tag" for the HDA FRU should be put on the "outside" of the barrier bag containing the HDA, so that logistics personnel can use the information and so that logistics personnel *do not* have to open the "re-sealed" container. The red tag should not be put on the outside of the cardboard shipping box, but on the barrier bag.

Troubleshooting Error Codes 13, F8, E0 through EB

Because of the RA90's packaging, it can be difficult to determine what is going on in the drive. You cannot see anything physically happen in operations such as spinning up the drive or observing actuator movements. Therefore, any fault or error condition is difficult to diagnose by simple visual measures.

At first oportunity, "play" with a working RA90. Hold your hand firmly on the blower bezel assembly and learn the "feel" of the drive. Keep your hand firmly on the assembly as you spin the drive up and "feel" what is happening. Feel the drive as it performs its head load sequence. Run all of the drive internal seek tests for a few minutes as you feel the activity. From the front of the drive, carefully listen to the activity that is happening in the RA90. This could be a valuable exercise for you when you examine a drive that does not work.

Examine the service manual for a few minutes and read about the error codes 13, F8, and E0 through EB. These error codes are likely codes that could happen as a result of a failure during a spin up and head load sequence.

In the service manual, following the error code 13 section, are several tables that provide information about pin connections for the rear HDA connector (spindle motor, actuator, brake ckts, and so on) and the power supply connector. One table is dedicated to resistance measurements that could be made at the rear HDA connector in order to positively determine that there is an HDA (internal or external problem).

These measurements should be made as necessary before actually breaking the seal (unpacking) a new spare HDA. One of these measurements indicate a check for resistance of the positioner lock solenoid. This solenoid is responsible for holding the actuator at the landing zone, and replaces the "plastic" lock handle on the RA8x HDAs. Should the positioner lock solenoid fail (open), and customer data still be on the disk, there is a workaround involving removal of the lock solenoid. This workaround is documented in the removal and replacement section of the service manual, titled "Spindle Lock Solenoid Failure."

Media Removal Service for "Secure Sites"

Digital will be offering media removal services for the RA90 for those customers having such requirements. The procedure for doing this service is part of the service manual removal and replacement procedures.

Troubleshooting a Drive Hung in "WAIT"

When power is restored normally to a drive, the drive goes through a state when it displays "WAIT" in the alphanumeric display for about 10 seconds. After the "wait," the OCP goes into a "normal" mode of displaying switch state if any are depressed, or the unit number.

A drive that hangs in "WAIT" generally is failing because of an ECM problem. It is during "wait" that the drive is just beginning to check its "sanity" and is not really communicating with either the SDI or the OCP. This failure condition would be very similiar to powering up an RA81 and all the OCP lamps staying lit.

Unit 5 Lesson 3

Exercises

1. When error event code 2D occurs, why does the power supply turn off all dc voltage?
   a. Overheat condition
   b. AC power failed
   c. Over voltage
   d. AC input power levels
2. If the OCP is having problems communicating serially, what type of error code would be constantly displayed?
   a. A9, A8, or A4
   b. C1, C2, or C3
   c. E1, E2, or E3
   d. B9, B8, or B4
3. For general random read/write problems, which is the first FRU to be considered?
   a. PCM
   b. ECM
   c. HDA
   d. SDI cable
4. Which FRU is responsible for the logic decode and amplifier if write-current is generated?
   a. ECM
   b. HDA
   c. PCM
   d. OCP
5. When troubleshooting an error code 60, which FRU should you replace first?
   a. ECM
   b. HDA
   c. OCP
   d. PCM

The answers are on the following page.

Answers

1. a
2. d
3. b
4. c
5. d

6
Removal/Replacement/LARS

This unit covers FRU removal and replacement, and also how to fill out LARS reports.

Removal/Replacement

WARNING
Before you remove any FRU, make sure the RA90's power switch is turned off.

CAUTION
Be sure to always use proper grounding procedures when removing and replacing any FRU.

To get to any RA90 FRU, you must remove both the front and rear access doors.

On the front and at the top of the SA600 are two ground straps. One ground strap should be connected to you. The other ground strap should be connected to the conductive container of the new FRU.

Be sure to follow the step-by-step procedures in your service manual for removing and replaceing any FRU.

When working on the HDA, you should set the HDA on an antistatic mat.

Use extreme care to prevent damage to the HDA. The HDA is heavy, so use both hands to perform the removal procedure.

When working on the brake assembly, **never** turn the spindle counterclockwise, because this can **severely damage** the HDA.

LARS

The most critical items in a LARS report are the *option name* and the *option serial number.*

Option Serial Number
Always report the drive serial number of the drive you are servicing. The serial number is on the rear of the drive, next to the power supply. You can also get the drive serial number through by looking at the OCP display.

If you are working on the storage array itself, then report it as an option utilizing the cabinet serial number.

It is important to record the serial numbers in a consistent way while conforming to the seven digit field.

Two typical RA90 10-digit serial numbers could be "CX63601259" or "KB822B1259." The prefix is the manufacturing site code and could be either "CX" or "KB."

Currently, there are only seven character fields in CHAMPS, so you must first begin filling in the option serial number with the two-character site code. Then include **only** the last five digits of the serial number.

It is also important to use the following:

- The abbreviated name of the replaced FRU, such as HDA, ECM, or the PCM.
- The fault code or codes that led you to replace the FRU, such as ECCs, EC15, ECOC, or the VAxsim-PLUS theory code that was used to determine the FRU replacement.
- For controller-detected errors, use the **controller fault codes,** and remember to report any other system-level symptoms.
- When doing an installation, each drive should have a one-line entry in the LARS report, to mark the date of its installation.

Without this information, it would be impossible to do a meaningful reliability analysis of the RA90.

In your service manual there is an appendix with samples of LARS reports. Follow these samples when filling out your LARs reports.

7

Interactive Troubleshooting Simulator (ITS)

When you enter the ITS program, you see a menu similar to the following:

Instructions
Operator Control Panel (OCP) Exercise
Troubleshooting
Exit

To enter the ITS program, you must exit this course and run the RA90 ITS.

The on-screen instructions tell you how to run the ITS. The instructions are also in your *ITS Reference Guide*.

The OCP exercises give you a chance to practice using the operator control panel. There is a checklist of exercises to complete in your *ITS Reference Guide*.

In the "Troubleshooting" section, you are presented with 11 customer problems. After you complete the 11 troubleshooting problems, you must re-enter the RA90 course and complete the Final Test and Q/A.

digital™

Made in U.S.A.